BLE to UART Bridge Controller CH9140

Datasheet

Version: 1B

http://wch.cn

1. Overview

CH9140 is a *Bluetooth*® low energy (BLE) to UART bridge controller, which supports BLE host-slave mode or slave mode and supports BLE4.2. The baud rate is up to 1Mbps. It supports MODEM contact signal, and supports automatic connection or binding in BLE host-slave mode.

The virtual serial port driver on the computer end is provided for BLE interface to directly use serial port debugging tool. It is compatible with the serial port application program, and it can communicate with UART without secondary development, easily realizing the exemption of wire plugging and not being limited by the cable distance.

The figures below are some application block diagrams of CH9140:

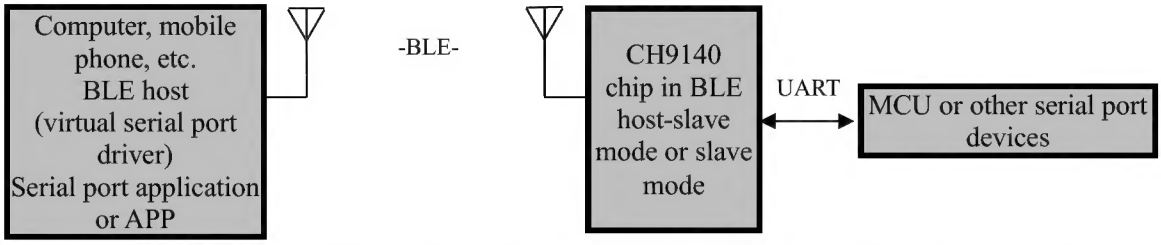

Figure 1 Block Diagram of Serial Communication between BLE Host and Serial Port Device through CH9140 BLE

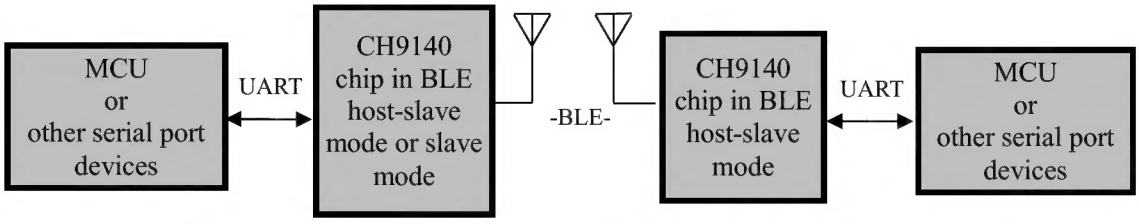

Figure 2 Block diagram of communication between MCUs or Serial Port Devices on Both Ends through CH9140 in BLE Host-slave mode

2. Features

- Provide computer-end BLE virtual serial port driver.
- Compatible with existing serial port software and tools, without secondary development.
- Support BLE host connection for Windows/Linux/Android/iOS and other systems.
- Support BLE host-slave mode and slave mode.
- Support automatic connection or binding in BLE host-slave mode.
- Support hardware configuration parameters.
- Transmission distance: 100 meters.
- Support adjustable 8 positions of transmission power.
- The power-off sleep current is 0.3uA.
- Support 3.3V and 2.5V working voltage.

- The maximum baud rate is 1Mbps.
- UART supports MODEM communication signals RTS, DTR, DCD, RI, DSR and CTS.
- UART supports odd, even, no parity, blank 0, mark 1 and other verification methods.
- Support obtaining the chip supply voltage parameters.
- 32K clock source, optional external crystal oscillator.
- QFN28 package, square leadless 28-pin.

3. Applications

- MCU/DSP/embedded system.
- Industrial instrumentation.
- Smart home.
- USB and serial port wireless extension.

4. Package

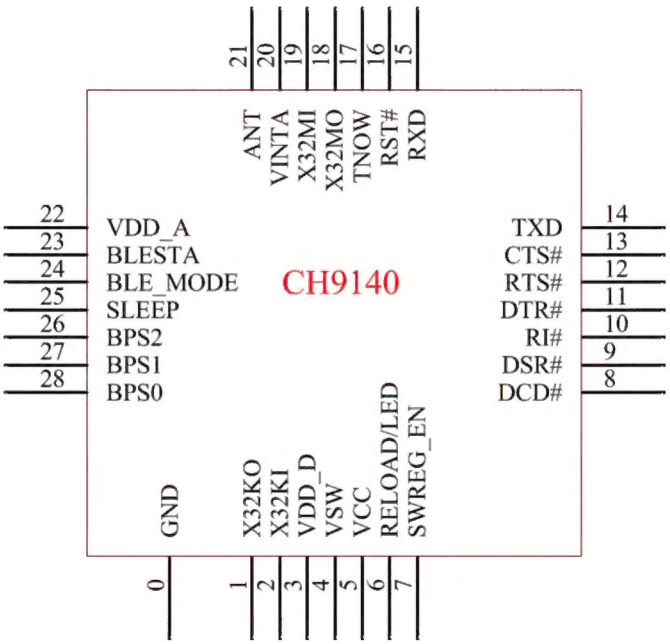

Package	Width of Plastic	Pitch of Pin		Instruction of Package	Ordering Information
QFN28	4*4mm	0.4mm	15.7mil	Square leadless 28-pin	CH9140

5. Pin

Pin No.	Pin Name	Pin Type	Pin Description
0	GND	P	Power ground
1	X32KO	A	Inverted output terminal of low-frequency crystal oscillator
2	X32KI	A	Inverted input terminal of low-frequency crystal oscillator
3	VDD_D	P	Internal chip power supply input, requires an external 2.2uF decoupling capacitor

4	VSW	P	Internal DC-DC power switch output, connected with VDD_D and VDD_A
5	VCC	P	Chip power supply input, requires an external 2.2uF decoupling capacitor
6	RELOAD /LED	I/O	When the chip is powered on, it is RELOAD, the input pin to restore factory settings. Restore the factory settings after detecting low level for 2 seconds continuously. After the chip is powered on, it is LED, the chip status indication signal output pin, active low.
7	SWREG_EN	I	Internal DC-DC power supply enable, enabled when at low level, with built-in pull-up resistor
8	DCD#	I	MODEM input signal of UART, carrier detect.
9	DSR#	I	MODEM input signal of UART, data device ready.
10	RI#	I	MODEM input signal of UART, ring indicator.
11	DTR#	O	MODEM output signal of UART; data terminal ready.
12	RTS#	O	MODEM communication output signal, request to send, active low.
13	CTS	I	MODEM communication input signal, clear to send, active low.
14	TXD	O	Serial port transmit pin
15	RXD	I	Serial port receive pin
16	RST#	I	Chip reset pin, active low
17	TNOW	O	Serial port transmit data status pin, active high
18	X32MO	A	Inverted output of high-frequency crystal oscillator
19	X32MI	A	Inverted input of high-frequency crystal oscillator
20	VINTA	P	Internal analog circuit power node, requires an external 2.2uF decoupling capacitor
21	ANT	A	RF signal input and output
22	VDD_A	P	Internal analog circuit power input, requires an external 0.1uF decoupling capacitor
23	BLESTA	O	BLE connection status indication signal output pin, It outputs low level by default when not connected, and outputs high level after connected.
24	BLE_MODE	I	BLE mode setting, with built-in pull-up resistor Low level: Integrated host-slave mode. High level: Slave mode
25	SLEEP	I	Low-power control pin, active low, with built-in pull-up resistor
26	BPS2	I	Baud rate configuration pin, with built-in pull-up resistor, definition of BPS[2:0] value: 000: Self-adaptive baud rate 001: 9600bps 010: 19200bps 011: 38400bps 100: 57600bps 101: 230400bps 110: 1000000bps 111: 115200bps (default)
27	BPS1	I	
28	BPS0	I	

Note: P: power pin; A: analog pin; I: input pin; O: output pin

6. Functional Specification

6.1 Slave Mode

In slave mode, the chip will transmit fixed broadcast data. The default broadcast name is "CH9140BLE2U" and the interval is 100mS. The slave supports four basic BLE services, and UUID of transparent transmission service is 0xFFF0.

Please refer to the following table for descriptions of communication UUID.

UUID	Property	Description
0xFFF1	Notice	The data received by UART will be transmitted to the host through this channel, and the host needs to enable notification. The data will be packaged in the size of MTU, and the exceeded data will be transmitted by the chip in separate package.
0xFFF2	Write only	Host transmit data channel, data will be sent out through UART.
0xFFF3	Read, write	Configuration channel, reserved.

6.2 Host-Slave Mode

In host-slave mode, BLE host and slave work at the same time. When one of them establishes connection with other BLE, the other will stop. It should be noted that CH9140 can only establish connection with our company's other BLE chips when it acts as BLE host. Please refer to Section 6.3 for specific BLE pairing method.

6.3 Smart Pairing function

When CH9140 is in host-slave mode, input MAC address and connection can be established between it and specified CH9140/CH9143, without AT command. After successful pairing, the two establish a binding relationship, and there is no need to pair again for next connection.

The steps for pairing are as follow:

1) CH9140 is in host-slave mode. CH9140/CH9143 is in slave mode or in host-slave mode;
2) To establish pairing, the two should complete power-up within 3s;
3) The LED flashes 3 times and then stays on, indicating successful pairing.

To re-establish pairing, a new pairing process is required. The difference is that LED will flash quickly in the third step. Re-power on either end, and pairing can be re-established.

6.4 Serial Transparent Transmission Function

The serial transparent transmission uses an asynchronous serial port. When leaving the factory, the default is 115200bit/s baud rate, 8 data bits, 1stop bit, no check and flow control enabled. The serial port receive buffer of the chip and transmit buffer each is 1K bytes. The serial port will transmit data by BLE in real time while receiving data. Because BLE communication rate is related to its environment, it is not needed to enable flow control when communication quality is great and the baud rate does not exceed 115000bit/s. However, when communication quality is poor and the baud rate exceeds 2KB/s, it is recommended to use CTS/RTS flow control to prevent buffer overflow.

6.5 LED Function

Table of LED status description

No.	Status	Description
1	Single flash 3 times after power-up	Currently in slave mode.
2	Double flash 3 times after power-up	Currently in host-slave mode.
3	Flash at 500ms intervals.	Currently in broadcast status.
4	Keep on.	Currently in connection status.
5	Flash quickly during connection.	Currently being transmitting data.
6	Flash quickly during pairing.	Have established pairing with other device, it is needed to power-up again for pairing.

6.6 Self-adaptive Baud Rate Function

To enable self-adaptive baud rate function, it is required to set all baud rate configuration pins at low level, and then reset the chip or power up again.

After this function is enabled, data is transmitted to the chip through UART, and the chip will communicate with the recognized baud rate after the baud rate is recognized successfully. The following baud rates are supported: 1200, 2400, 4800, 9600, 14400, 19200, 38400, 57600, 115200 and 230400. It should be noted that data will be lost when recognizing the baud rate, and communication will be normal after successful baud rate recognition.

6.7 Low Energy Function

The chip can pull the low-energy sleep control pin (SLEEP pin) down to control chip to enter low energy mode. Low energy mode does not mean the true sleep, BLE will be woken up automatically and processed according to BLE communication requirement. Data received by BLE will be transmitted to the host control by UART, and BLE will automatically sleep with no transaction to process. But for the host control, to transmit data, it must pull the sleep pin up, wait for more than 20mS and then transmit data. Otherwise it may cause data error. The chip will exist low energy mode after pulled-up.

6.8 External 32K Automatic Detect Function

CH9140 supports automatically detect external 32K crystal. If there is no external 32K crystal, the internal 32K crystal is used. Otherwise the external 32K crystal is used to provide input clock, cooperating with the internal clock oscillator.

7. Parameters

7.1 Absolute Maximum Value

Critical value or exceeding the absolute maximum value may cause the chip to work abnormally or even be damaged.

Name	Parameter description	Min.	Max.	Unit
TA	Ambient temperature during operation	-40	85	℃
TS	Ambient temperature during storage	-40	105	℃
VCC	System supply voltage	-0.4	3.9	V
VIO	Voltage of the input or output pins	-0.4	VCC+0.4	V

7.2 Electrical Parameters

Name	Parameter description	Min.	Typ.	Max.	Unit
VCC	Supply voltage	2.5	3.3	3.6	V
VIL	Low level input voltage	0		0.9	V
VIH	High level input voltage	2.0		VCC	V
VOL	Low level output voltage	0	0.3	0.4	V
VOH	High level output voltage	VCC-0.4	VCC-0.3	VCC	V
IUP	Input current of the input terminal with built-in pull-up resistor	25	60	90	uA